KEY SPECIFICATION

Product Spec Sheet

5" x 14" Soffit Vent Model # UE2031-RS

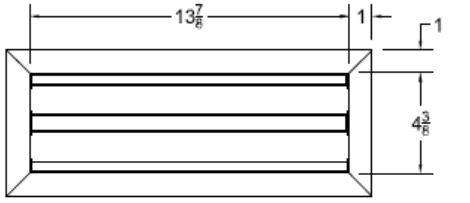

TOP VIEW

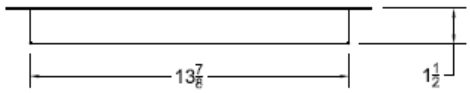

SIDE VIEW

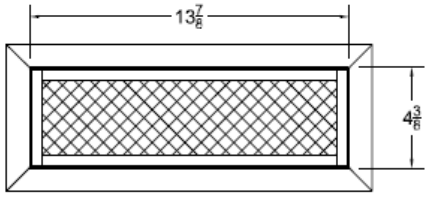

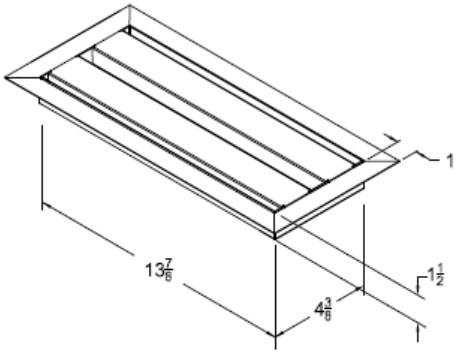

Soffit Vents	Model	Size W x L	NFVA Provided	Flanges Available	Flange Definition	Weight
	UE2031-RS	5" x 14"	21	Retrofit Soffit	1" Flange Front	4lbs
Continuous Soffit and Custom sizes/materials AVAILABLE						

BENEFITS:

- Safety vents that are used in areas prone to wildfires, wind driven rain, or winddriven snow.
- Overlapping Baffle Protection (Patented)
  - Air Flows through normally
  - Resists the intrusion of Flame <u>and</u> Embers, Wind Driven Rain and Wind Driven Snow
- Approved for use throughout California and beyond
- Anti -Clogging Overlapping Baffles plus 1/8" mesh on back side of vent
- Prevents Rodent Entry
- 20 Year Warranty
- Easy to Install and Paint

STANDARD MATERIALS
ASTM A653/A653M- G90 hot dipped galvanized steel, 26GA
ASTM D9092- mill phosphatized coating for painting. IF BONDERIZED
ASTM b370- Sheet Copper, 16oz and 20oz IF GALVANIZED
.025 x.025 hot dipped galvanized 23ga wire mesh

Installation: Install like any other similar Ventilator Product on the market.